CNENGR 116
Fundamentals of Digital Electronics

Lecture 10 – Data Path Components

Dr Zhongming Zhang

zhongming.zhang@lancaster.ac.uk

School of Engineering

Lancaster University

Science and Technology at Lancaster

Lancaster University College at Beijing Jiaotong University

Recap

- Asynchronous Counters
- Synchronous Counters

3-bit Asynchronous Binary Counter

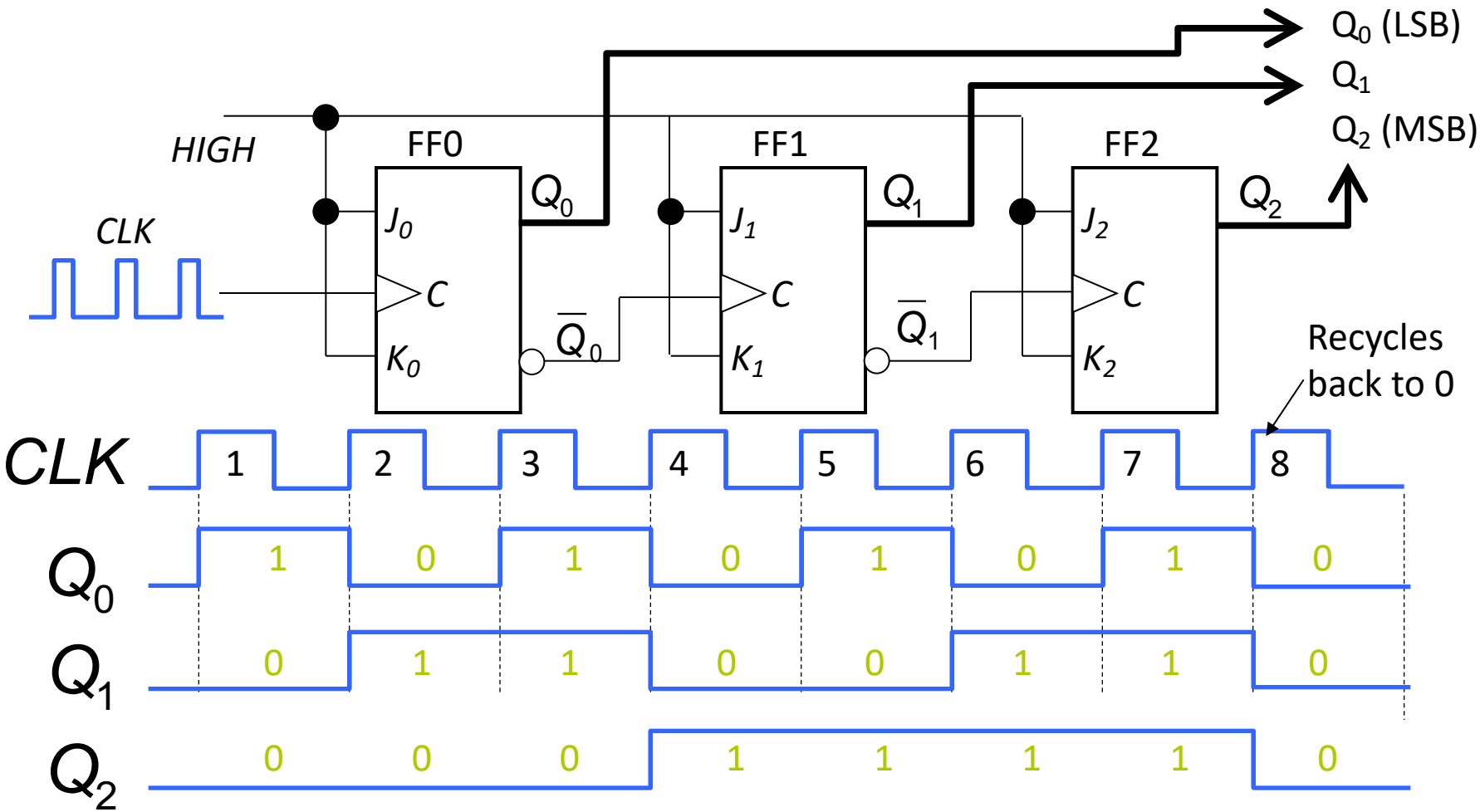

Binary Numbers 001 010 011 100 101 110 111 000

Propagation delay

- Real flip-flops have a delay time for passing on the signal and therefore would introduce a time shift which would increase the further down the line we go.

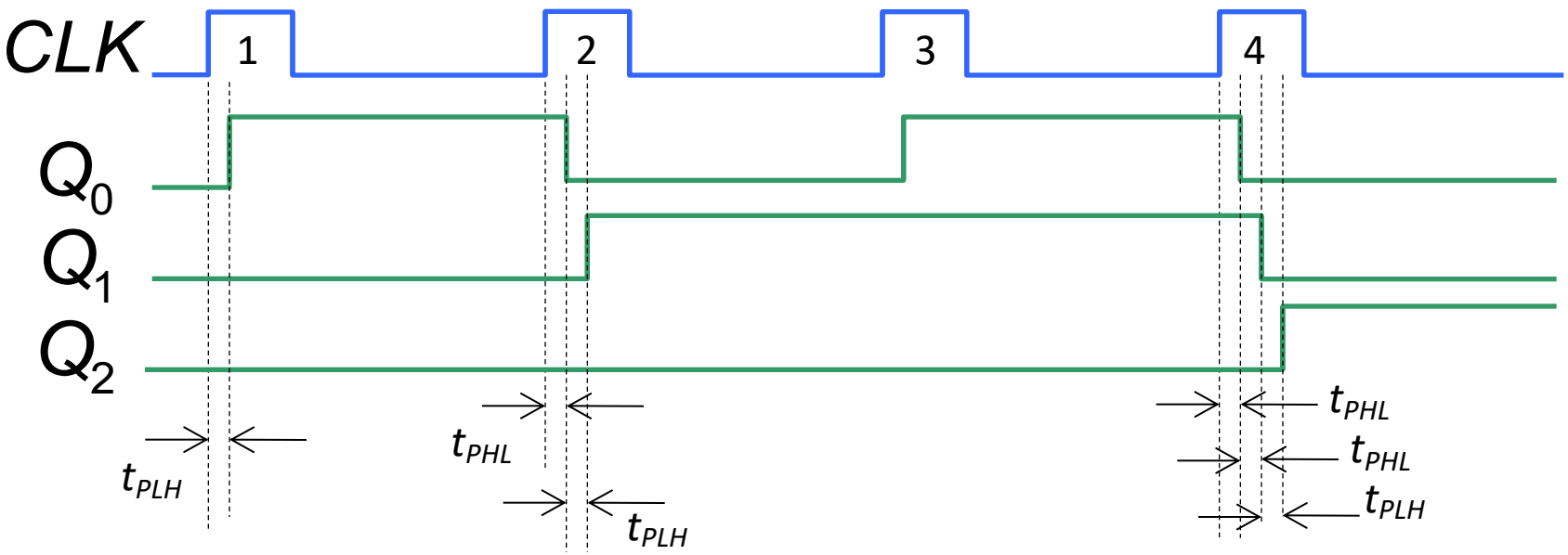

3-bit Synchronous Binary Counter

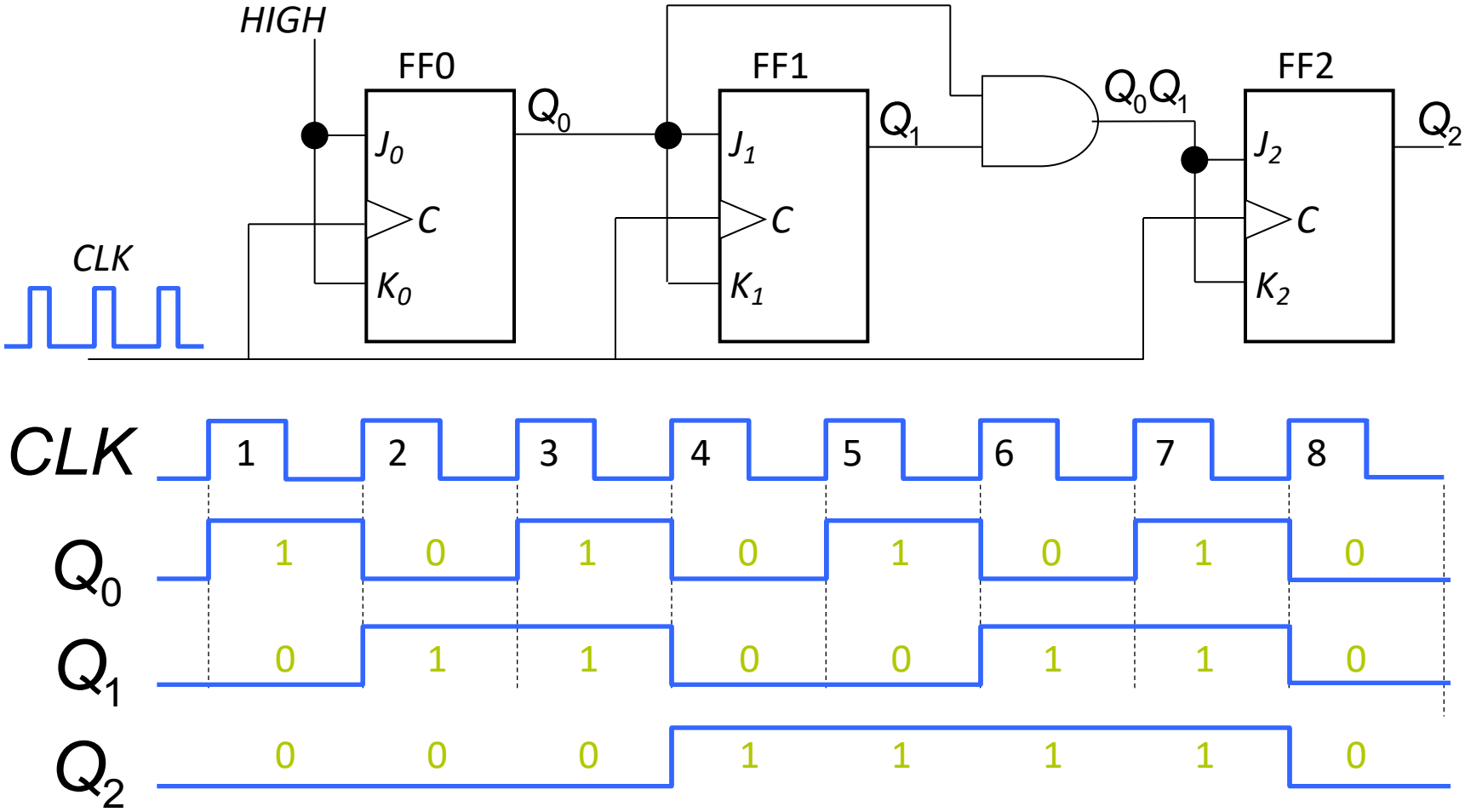

Learning Objectives

- Understand the concept of a datapath component
- Understand Encoders, Decoders, Multiplexers, Demultiplexers, Registers
- Apply datapath components to the design of logic circuits

"Great things are not done by impulse, but by a series of small things brought together."

Vincent Van Gogh

1. Datapath Components

- Use of primitive components
  - Combinational components (AND, OR, NOT, …)
  - Sequential components (Latches, Flip-Flops, …)

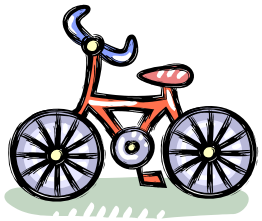

Appropriate building blocks:
Tires, seat, pedals
Not:
Rubber, glue, metal

- Need appropriate building blocks for data processing
  - **Data** input: Handling multiple bits
    - E.g. 7-bits representing temperature in binary
  - **Datapath components** (register-transfer-level, or RTL) components: store/transform data.
    - Combine these components to form a **datapath**

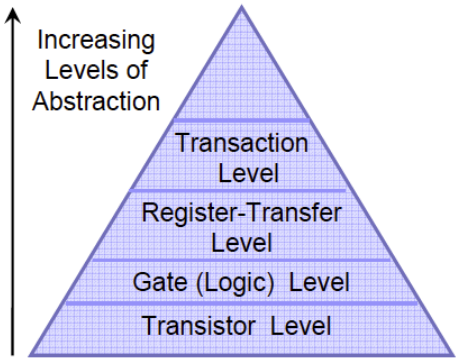

2. Combinational Datapath Components

- **N-bit Bus**: N wires to carry N-bit data items
  - Circuit drawings can become cluttered
- Convention for drawing buses
  - Single bold line and/or small angled line across

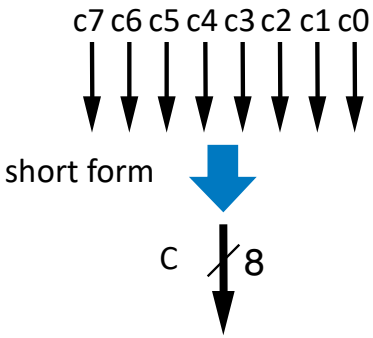

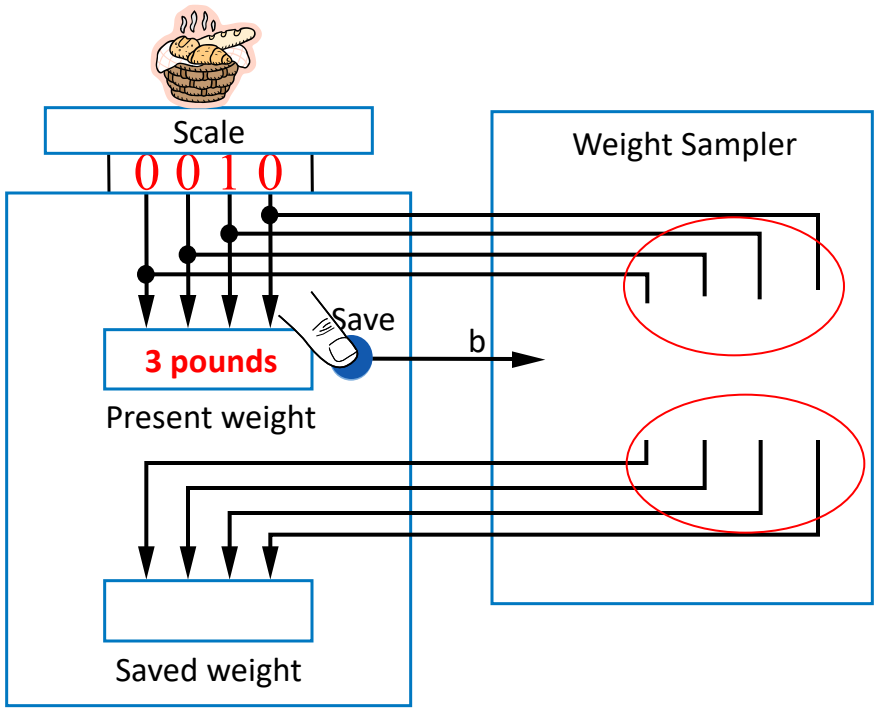

2.1. Encoders

- **Encoder:** converts one of the 2^n (high) inputs to an n-bit output binary number
- **Example: 4-input encoder**: four possible input binary numbers

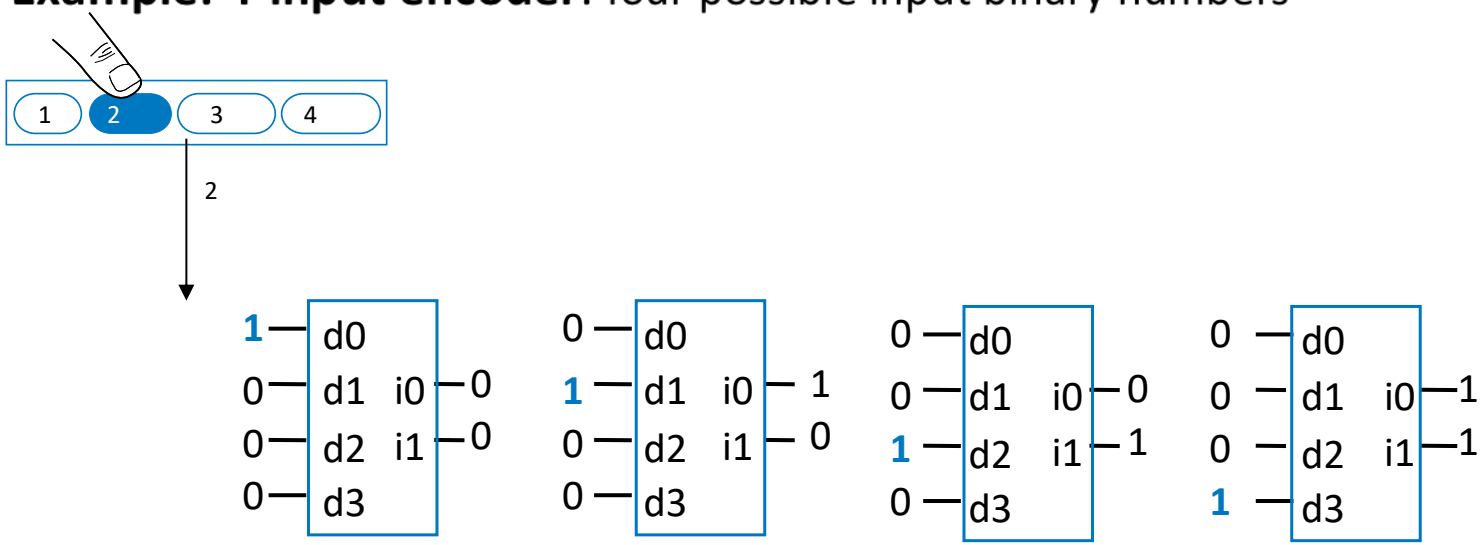

2.2. Decoders

- **Decoder:** converts n-bit input binary number to one of the 2^n (high) outputs
- **Example: 2-input decoder**: four possible input binary numbers

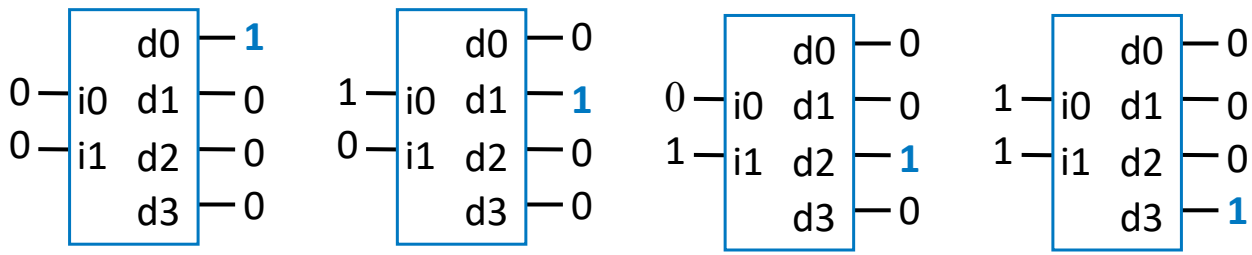

- Decoder with enable e
  - Outputs all 0 if e=0
  - Regular behavior if e=1

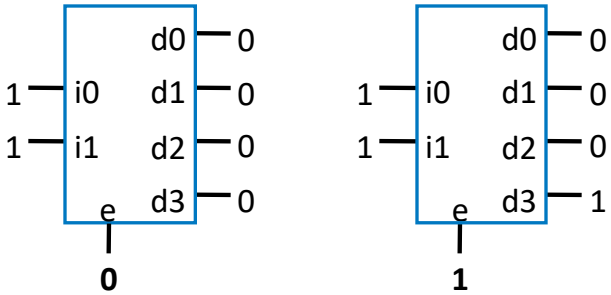

2.3. A Quick Exercise

- You are given a microprocessor to count from 0 to 59 in binary and turn a lamp on corresponding to each number. What is the size of a suitable decoder for this application?

NOT AVAILABLE IN PREVIEW

2.4. Multiplexer (Mux)

- **Multiplexer**: Routes one of its N data inputs to its one output, based on binary value of select inputs

2x1 mux

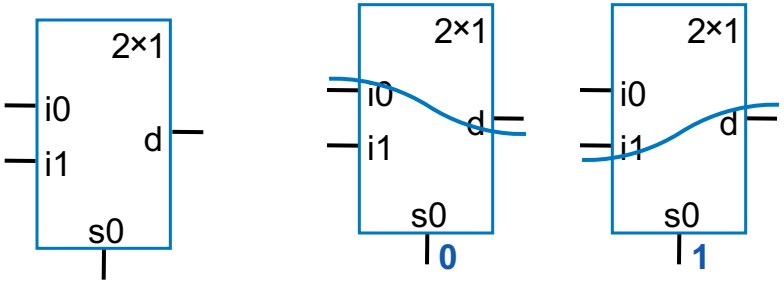

4x1 mux

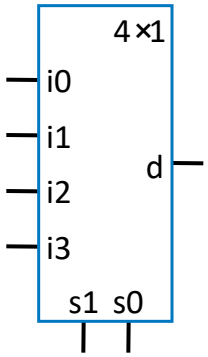

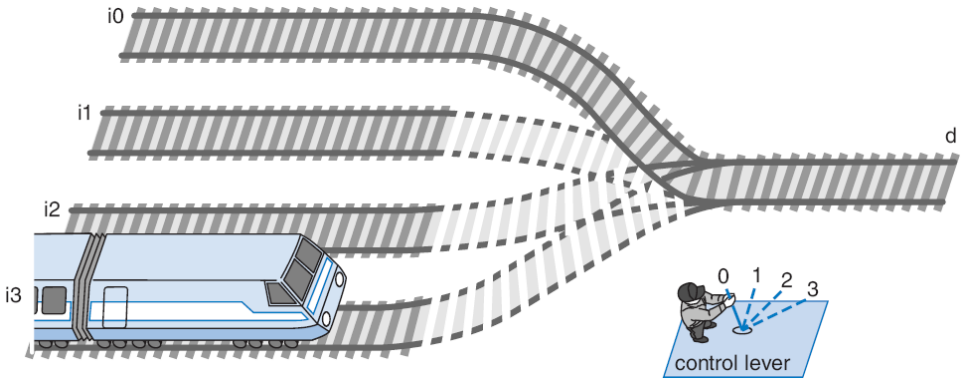

2.5. Demultiplexer (DeMux)

- **Demultiplexer**: Routes one input to one of its N data outputs, based on binary value of select inputs

1x2 DeMux

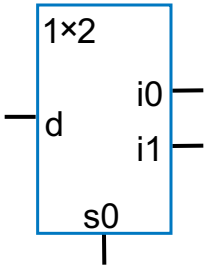

1x4 DeMux

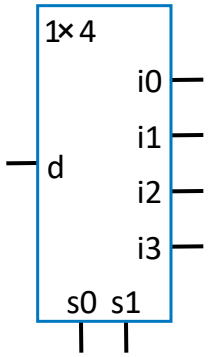

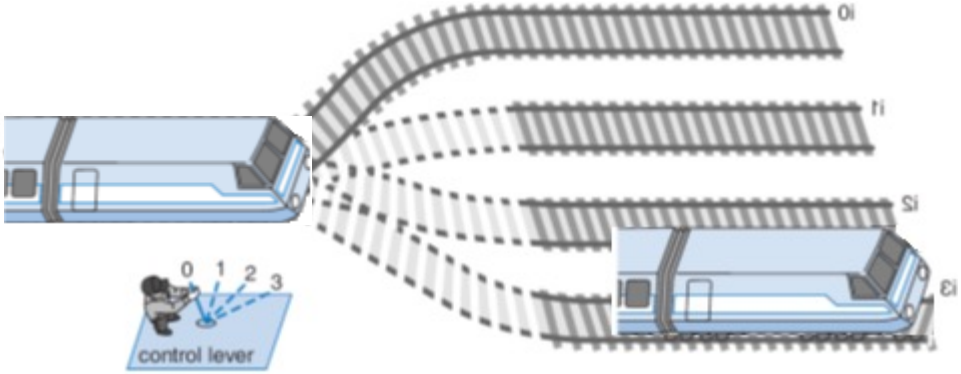

2.6. N-bit Mux – A Practical Example

- Above-mirror display in automobile
  - Temperature (T)
  - Average miles-per-gallon (A)
  - Instantaneous mpg (I)
  - Miles remaining (M)

Each of these values (in this example) require 8-bits to describe them to a satisfactory accuracy

By pushing a button choose which to display

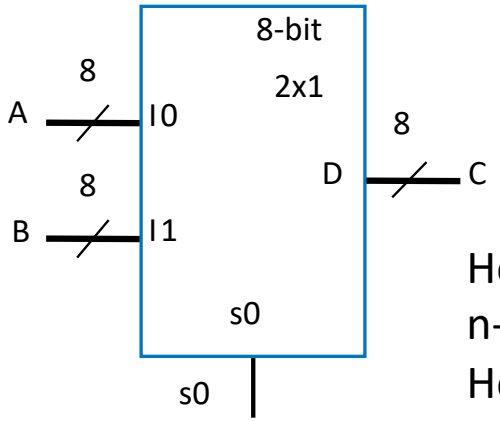

How many inputs?
n-bits per input?
How many control lines?

2.6. N-bit Mux – A Practical Example

- Use 8-bit 4x1 mux

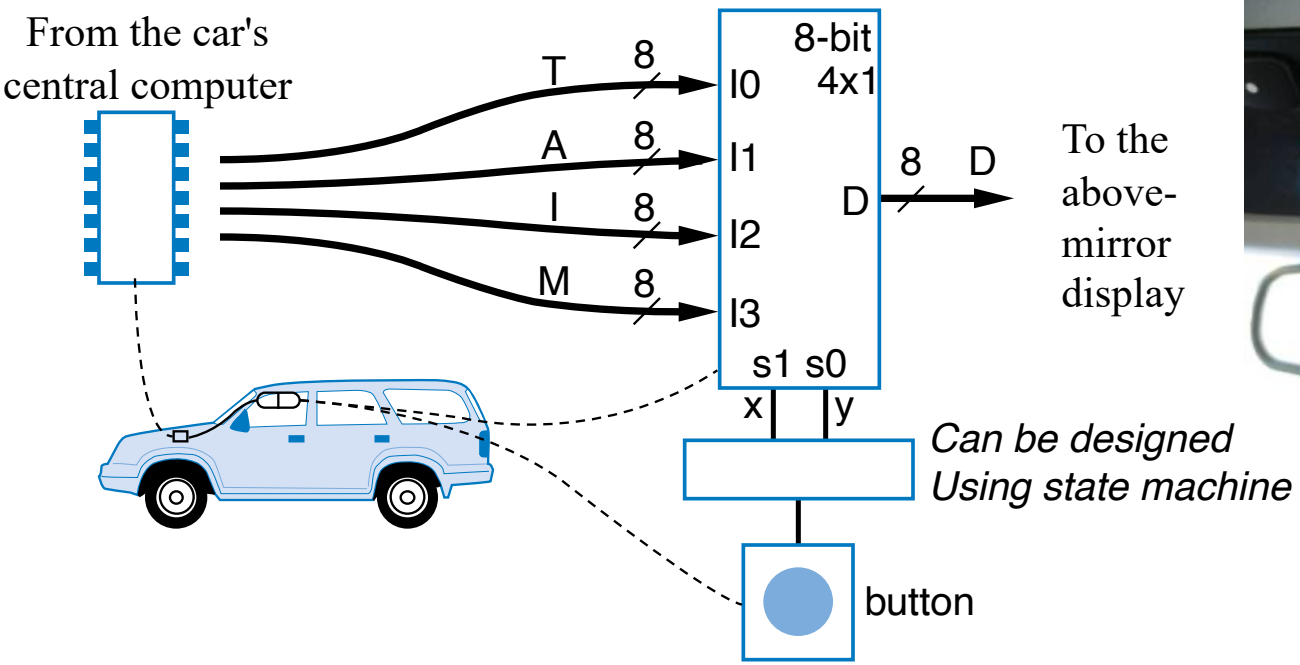

2.7. A Quick Exercise

- A 4-bit 2x1 multiplexer has two 4-bit inputs A (a3 a2 a1 a0), and B (b3 b2 b1 b0). Design this multiplexer from four 1-bit 2x1 multiplexer.

NOT AVAILABLE IN PREVIEW

3. Registers

- **N-bit register:** Stores N bits, N is the *width*
  - Multiple flip-flops sharing clock signal
  - Common widths: 8, 16, 32
  - Storing data into register: *Loading*
  - Opposite of storing: *Reading* (does not alter contents)

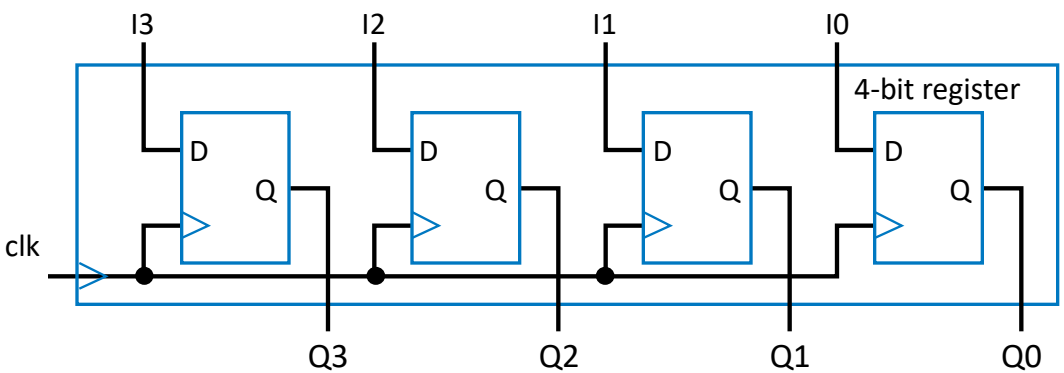

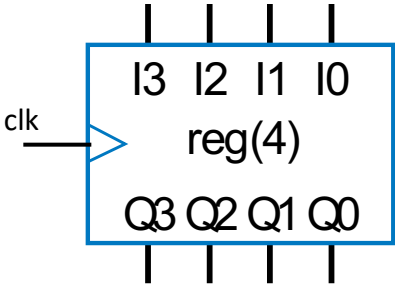

Basic register

3.1. Register with Parallel Load

- Add a feedback from output to input
- Add a 2x1 mux in front of each flip-flop

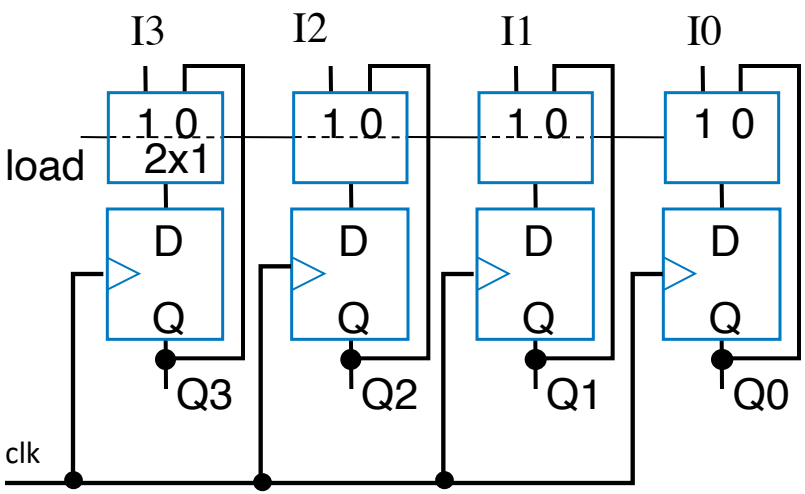

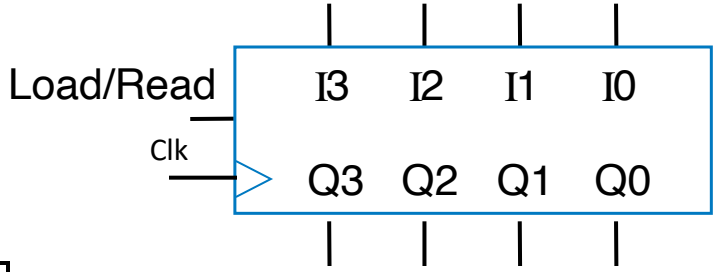

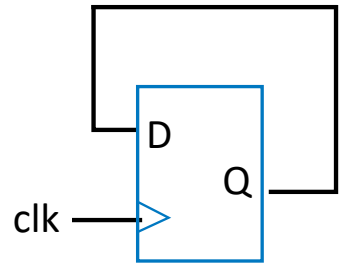

D flip-flop
keeping its current value

3.1. Register with Parallel Load

- Register's *load* input selects mux input to pass
  - load=0: existing flip-flop value; load=1: new input value

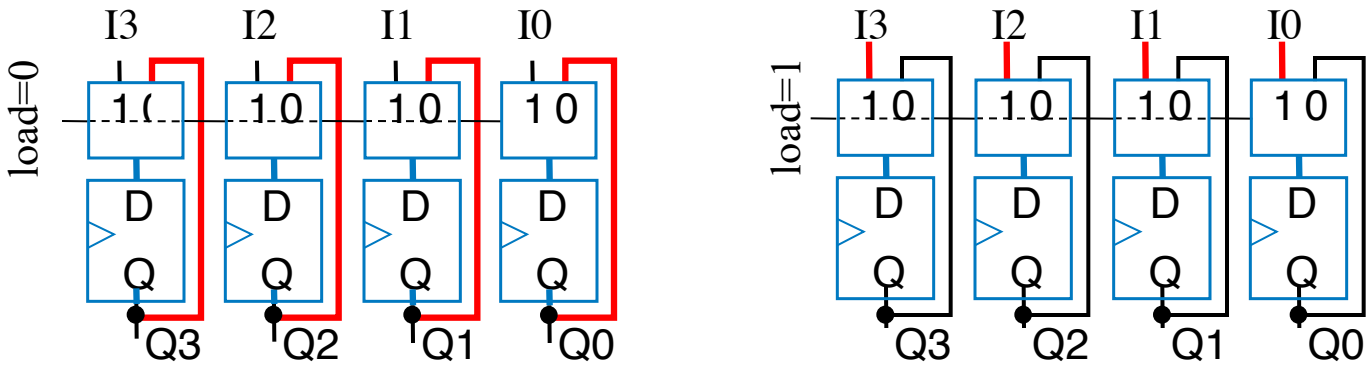

3.2. Weight Sampler – A Practical Example

- Scale has two displays
  - Present weight
  - Saved weight
  - Useful to compare present item with the previous item
- Use 4-bit parallel load register to store weight

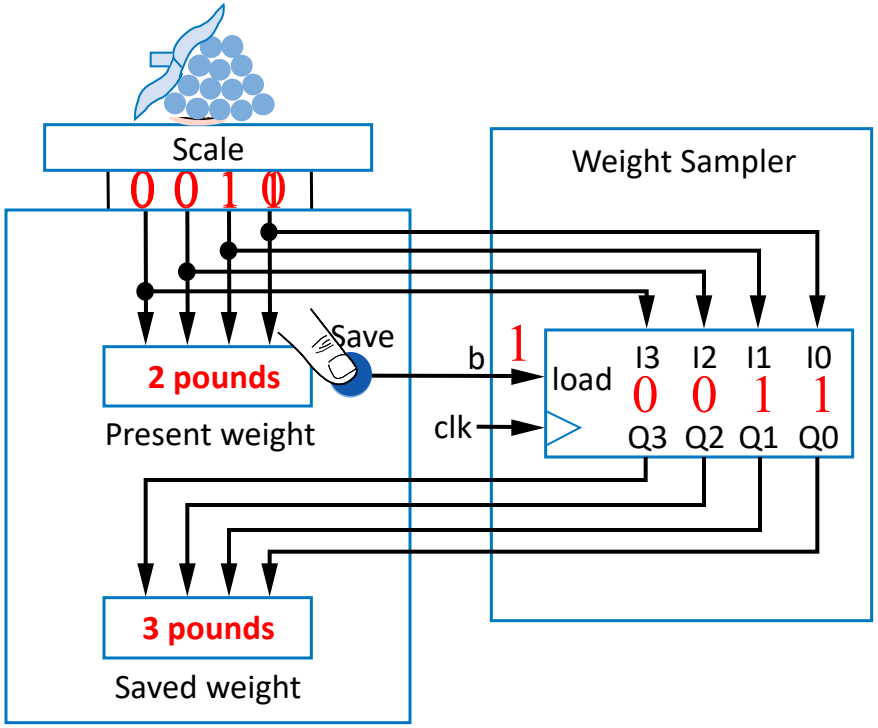

3.3. Shift Register

- Shift right
  - Move each bit one position right
  - Rightmost bit is “dropped”
  - Assume 0 is shifted into the leftmost bit

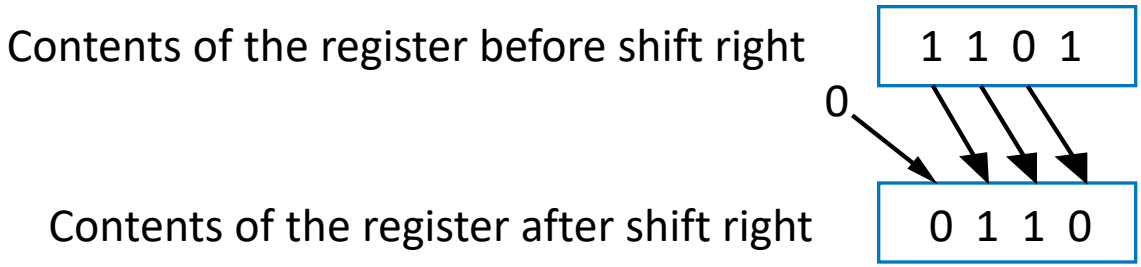

3.3. Shift Register

- Connect each flip-flop output to the next flip-flop's input

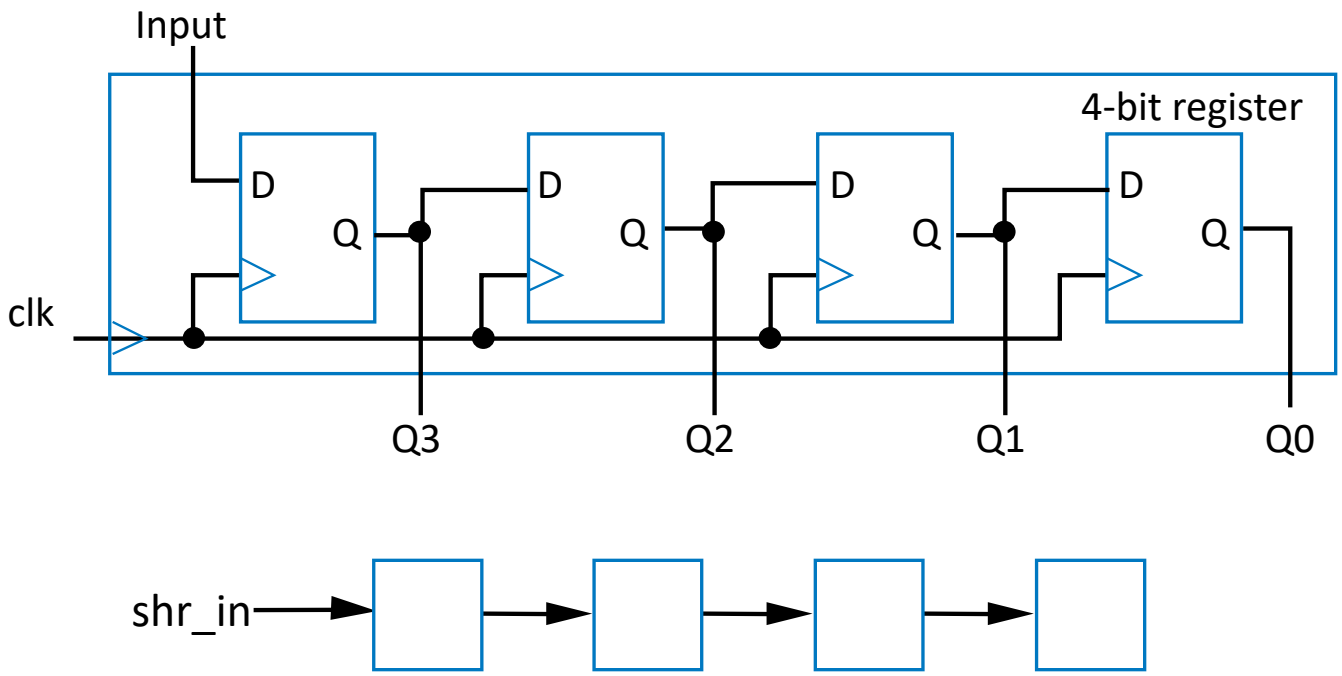

3.4. A Quick Exercise

- A binary number 1000 is stored in the 4-bit shift register. By doing four right shifts determine the output of register after each shift.

NOT AVAILABLE IN PREVIEW

Summary

- Introduced the concept of datapath components
- Decoder, Encoder, Multiplexer, Demultiplexer
- Register, Register with parallel load, Shift register